DESIGN CRITERIA

TYPE OF ESTABLISHMENT	2 BEDROOM RESIDENTIAL
DESIGN FLOW	220 G.P.D.
SEPTIC TANK CAPACITY	1500 GAL. SEPTIC TANK
LEACHING CAPACITY REQUIRED	220/.60 = 367 SQ. FT.
LEACHING CAPACITY PROVIDED	24 INFILTRATOR QUICK 4 CHAMBERS
	18.88 SQ. FT./ CHAMBER = 453 SQ. FT.

TEST PIT DATA

SOIL EVALUATOR: JASON DUBOIS
WITNESSED BY: LISA DAOUST
DATE: 1/20/2022
APPLICANT: WILLIAM GRIBBONS

TEST PIT #1	TEST PIT #2
0"-8" A SL 10YR 3/3 8"-24" B SL 10YR 4/6 24"-84" C SL 2.5Y 5/3 REDOX @ 60"	0"-8" A SL 10YR 3/3 8"-26" B SL 10YR 5/6 26"-76" C SL 2.5Y 5/3 REDOX @ 60"
GROUND WATER ELEV (OBSERVED) N/A MOTTLING ELEV (OBSERVED) 60" REFUSAL ELEV N/A	GROUND WATER ELEV (OBSERVED) N/A MOTTLING ELEV (OBSERVED) 24" REFUSAL ELEV N/A

TEST PIT #3	TEST PIT #4
GROUND WATER ELEV (OBSERVED) N/A MOTTLING ELEV (OBSERVED) N/A REFUSAL ELEV N/A	GROUND WATER ELEV (OBSERVED) N/A MOTTLING ELEV (OBSERVED) N/A REFUSAL ELEV N/A

AS BUILT INFORMATION

SYSTEM INSPECTION DATE:
SYSTEM CONSTRUCTED BY:

AS-BUILT TIES

POINTS	DIST.
A–C	
B–C	
A–D	
B–D	
A–E	
B–E	
A–F	
B–F	
A–G	
B–G	
A–H	
B–H	

AS BUILT NOTE

IT IS THE RESPONSIBILITY OF THE CONTRACTOR TO SUBMIT A LETTER CERTIFYING THAT THE SEWER GRAVEL INSTALLED MEETS TITLE V SIEVE ANALYSIS REQUIREMENTS TO DC ENGINEERING PRIOR TO THE SUBMISSION OF THE AS-BUILT. DC ENGINEERING IS NOT RESPONSIBLE FOR THE SIEVE ANALYSIS.

GENERAL NOTES

1. ALL CHANGES TO THIS PLAN MUST BE APPROVED BY THE TOWN OF SPENCER BOARD OF HEALTH
2. ALL SITE WORK AND MATERIALS SHALL BE IN COMPLIANCE WITH TITLE 5
3. ANY CONDITIONS DURING CONSTRUCTION THAT DIFFER FROM THOSE ENCOUNTERED DURING TESTING SHALL BE REPORTED TO DC ENGINEERING AND THE LOCAL BOARD OF HEALTH IMMEDIATELY.
4. REMOVE ALL TOPSOIL & SUBSOIL FOR A DISTANCE OF 5 FEET AROUND SYSTEM

4a. FILL MATERIAL FOR SYSTEMS CONSTRUCTED IN FILL SHALL CONSIST OF SELECT ON-SITE OR IMPORTED SOIL MATERIAL. THE FILL SHALL BE COMPRISED OF CLEAN GRANULAR SAND, FREE FROM ORGANIC MATTER AND DELETERIOUS SUBSTANCES. MIXTURES AND LAYERS OF DIFFERENT CLASSES OF SOIL SHALL NOT BE USED. THE FILL SHALL NOT CONTAIN ANY MATERIAL LARGER THAN 2 INCHES. A SIEVE ANALYSIS, USING A #4 SIEVE, SHALL BE PERFORMED ON A REPRESENTATIVE SAMPLE OF THE FILL. UP TO 45% BY WEIGHT OF THE FILL SAMPLE MAY BE RETAINED ON THE #4 SIEVE. FOR FURTHER INFORMATION SEE 310CMR 15:255(3).

5. OFFSETS ARE NOT TO BE USED FOR THE REPRODUCTION OF PROPERTY LINES.
6. ALL ELEVATIONS REFER TO AN ASSUMED DATUM.
7. NO ADDITIONAL CAPACITY HAS BEEN PROVIDED FOR A GARBAGE DISPOSAL.(NOT ALLOWED)

7a. NO ADDITIONAL CAPACITY HAS BEEN PROVIDED FOR A WATER SOFTNER.(NOT ALLOWED)

8. **THE PROPOSED SITE IS SUBJECT TO THE WETLANDS PROTECTION ACT.**
9. THE PROPOSED PROJECT DOES NOT FALL WITHIN A FLOOD HAZARD ZONE.
10. THE SEPTIC TANK SHOULD BE INSPECTED AND PUMPED EVERY 2 YEARS.
11. ALL EXISTING OR PROPOSED WELLS AND SEPTIC SYSTEMS WITHIN 150 FEET OF THE PROPOSED CONSTRUCTION ARE SHOWN OR NOTED TO THE BEST OF OUR KNOWLEDGE.
12. ALL WETLANDS, BROOKS, BODIES OF WATER AND FLOOD HAZARD ZONES WITHIN 200 FEET OF THE PROPOSED CONSTRUCTION ARE SHOWN OR NOTED TO THE BEST OF OUR KNOWLEDGE.
13. INSPECTIONS REQUIRED FOR ASBUILT CERTIFICATION * SEE ASBUILT NOTE *
   A. BOTTOM INSPECTION PRIOR TO THE INSTALLATION OF SEWER GRAVEL.
   B. ALL COMPONENTS OF SEPTIC SYSTEM MUST BE COMPLETE AND VISIBLE PRIOR TO REQUESTING A FINAL INSPECTION
14. DIG SAFE TO NOTIFIED PRIOR TO CONSTRUCTION AT 1-888-DIGSAFE.
15. INSTALL MAGNETIC TAPE OVER ALL SYSTEM COMPONENTS, TANK, D-BOX, LEACH AREA.
16. HYDRAULIC CEMENT IS REQUIRED TO SEAL ALL CONNECTIONS AT THE SEPTIC TANK AND D-BOX LEACHING AREA TO BE WATERTIGHT 4" PVC ASTM D 1785 LAID ON FIRM BASE.

PERCOLATION TEST DATA

SOIL EVALUATOR: JASON DUBOIS
WITNESSED BY: LISA DAOUST
DATE: 1/20/2022

	PERC 1	PERC 2
DEPTH:	40"	
FIELD RATE:	8 MPI	
DESIGN RATE:	10 MPI	
SOIL CLASSIFICATION:	2	

SYMBOL KEY

STONE WALL
BOUND
IRON PIPE
DRILL HOLE
UTILITY POLE
WELL
TEST PIT
PERC TEST
BENCH MARK

DIG-SAFE
PHONE # 877-344-7233

GRAPHIC SCALE
20 0 10 20 40 80
(IN FEET)
1 inch = 20 ft.

LOCAL UPGRADE APPROVAL REQUIRED FOR WELL TO BE 67' FROM LEACH FIELD
LOCAL UPGRADE APPROVAL REQUIRED FOR LEACH FIELD TO BE 25' FROM WETLAND RESOURCE AREA
LOCAL UPGRADE APPROVAL REQUIRED FOR LEACH FIELD TO BE 8.5' FROM FOUNDATION
LOCAL UPGRADE APPROVAL REQUIRED FOR LEACH FIELD TO BE 6.5' FROM PROPERTY LINE

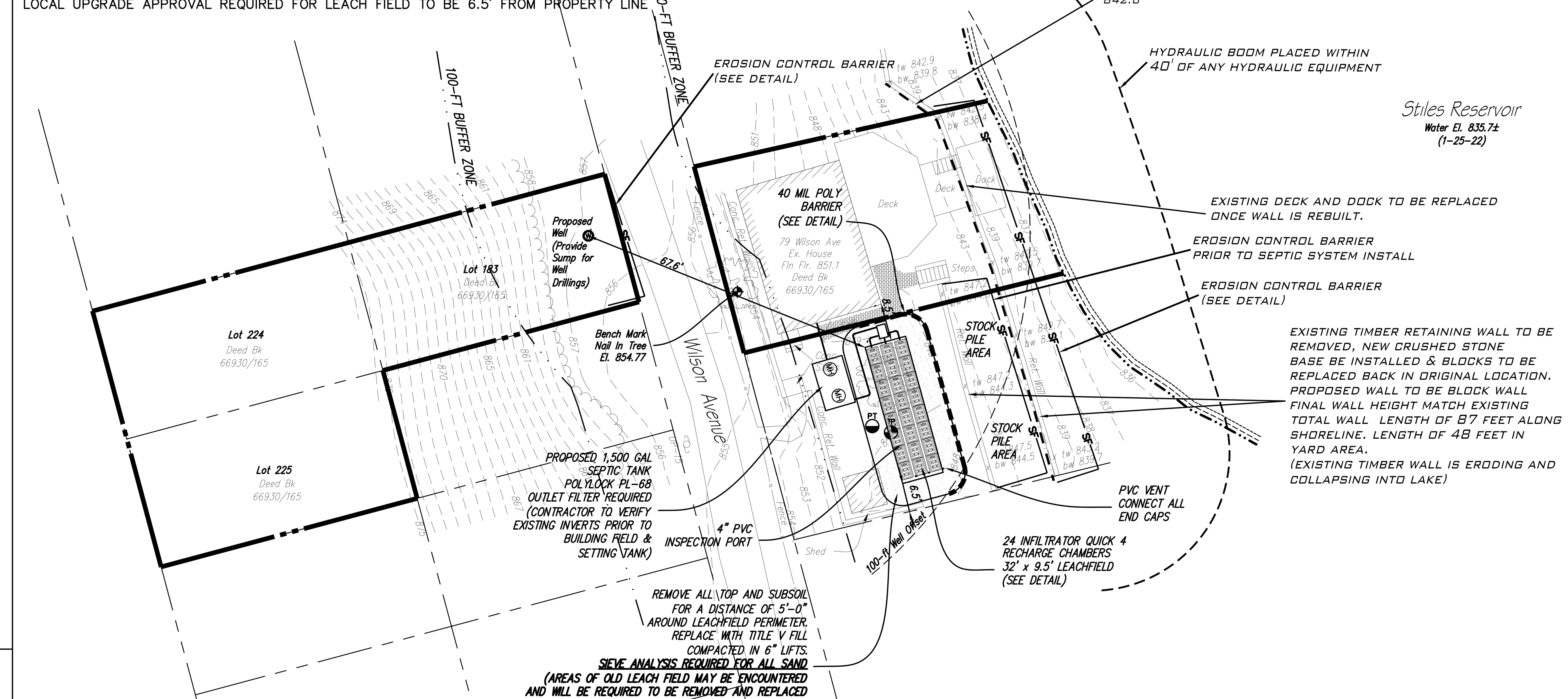

SEQUENCE OF CONSTRUCTION

- INSTALL EROSION CONTROL BARRIERS, INSPECTION BY CONSERVATION COMMISSION REQUIRED BEFORE ANY FURTHER WORK IS DONE.
- EXCAVATE & REMOVE SHORELINE RETAINING WALL
- SET NEW RETAINING WALL & REBUILD DECK
- INSTALL SEPTIC SYSTEM
- TREAT ANY DISTURBED AREAS WITH LOAM & GRASS
- EROSION CONTROLS TO REMAIN IN PLACE AND FUNCTIONAL UNTIL FINAL INSPECTION BY THE CONSERVATION COMMISSION HAS COMMENCED

LAND DISTURBANCE:
2,230 S.F.

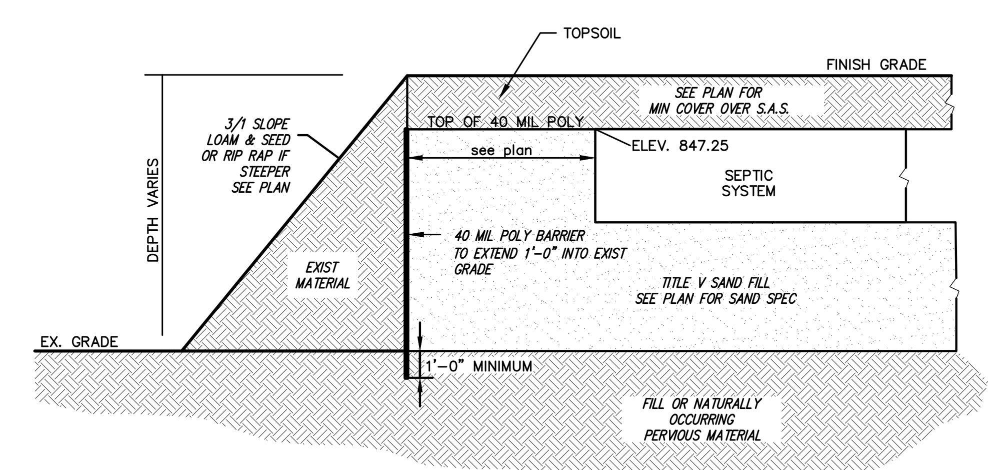

40 MIL. POLY BARRIER DETAIL
SCALE: NONE

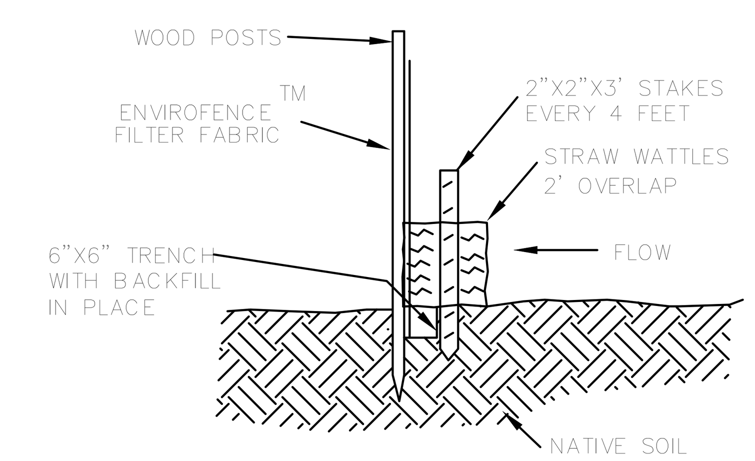

EROSION CONTROL BARRIER
NOT TO SCALE

DISPOSAL SYSTEM PROFILE

NOTE: DIG SAFE TO NOTIFIED PRIOR TO CONSTRUCTION AT 1-888-DIGSAFE. MAGNETIC TAPE TO BE PLACED OVER ALL SYSTEM COMPONENTS PRIOR TO BACKFILLING.

NOTE: HYDRAULIC CEMENT IS REQUIRED TO SEAL ALL CONNECTIONS AT THE SEPTIC TANK AND D-BOX
ALL PIPE FROM FOUNDATION TO LEACHING AREA TO BE WATERTIGHT 4" PVC ASTM D 1785 LAID ON FIRM BASE.

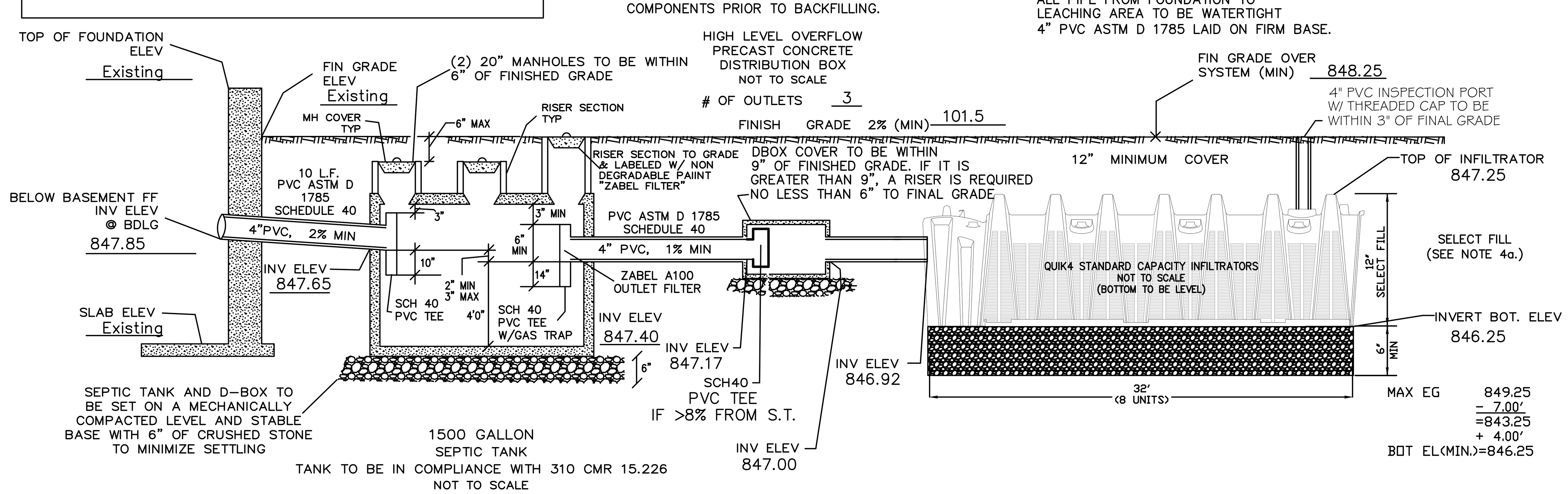

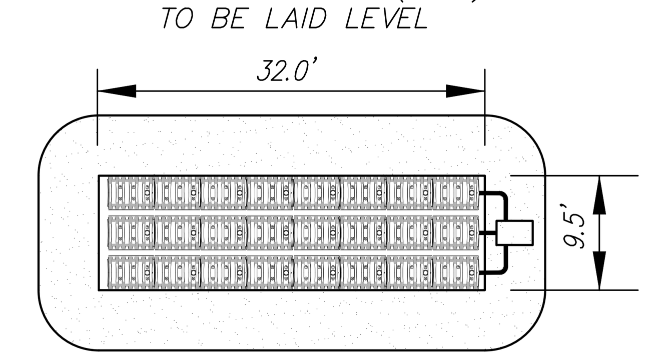

LEACHFIELD DETAIL
NOT TO SCALE

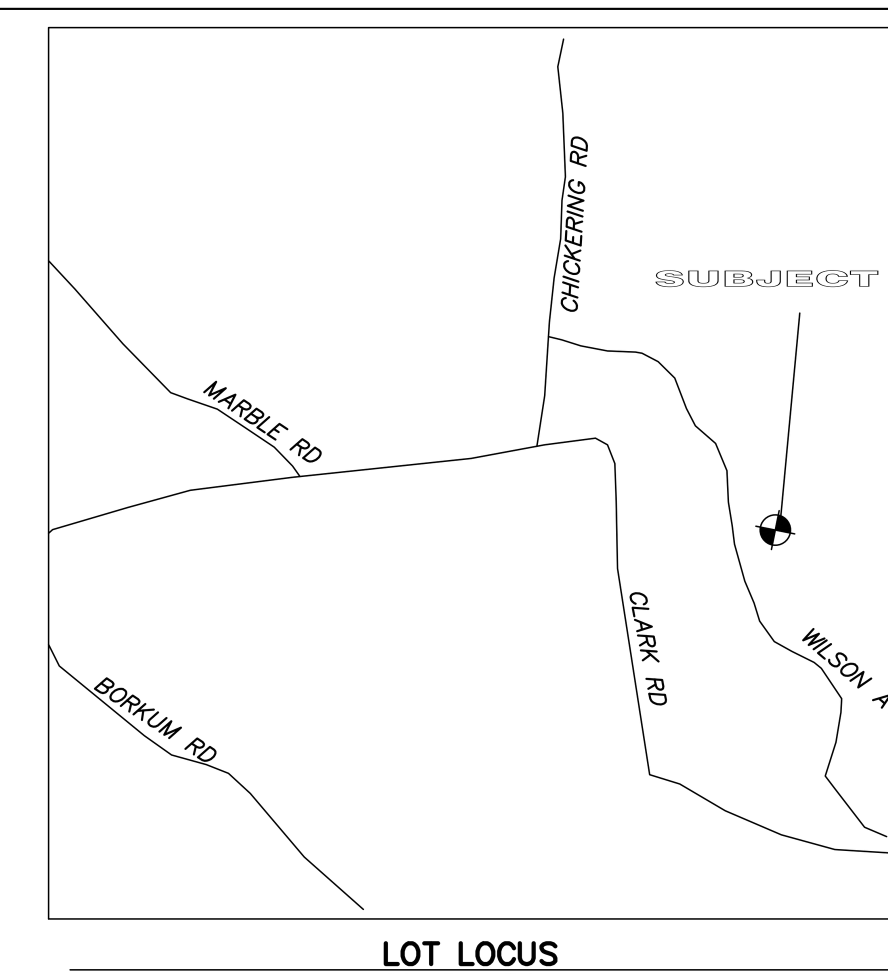

LOT LOCUS
SCALE: N.T.S.

JEREMY S. CROTEAU, P.L.S.
PROFESSIONAL LAND SURVEYOR
MA LIC. NO. 48722

NO.	DATE	REVISION

NORTH

DC ENGINEERING
508-789-6659
508-341-2127

CLIENT:
WILLIAM GRIBBONS
7 SUNNYSIDE ROAD
AUBURN, MA 01501

SITE PLAN / SEPTIC SYSTEM PLAN REPAIR
SITE ADDRESS: ASSESSORS U28/13
79 WILSON AVENUE
SPENCER, MA 01562

DRAWN BY: JDD	
CK'D BY: JDD	REV #: 0
DATE: 2-2-2022	SCALE: 1"=20'
PROJECT #: 22-109	DWG. NO.: S-1